DCB-8 & DCB-8 SUPER Metric Dimensions

Product Function: Start-Stop

Specifications

Maximum Speed:	300 RPM	Max. Anti-overrun Torque:	600 in.-lb.	Positioning Accuracy:	±1/2°
Static Torque:	2500 in.-lb	Max Anti-back Torque:	600 in.-lb.	Weight:	14.25 lbs.

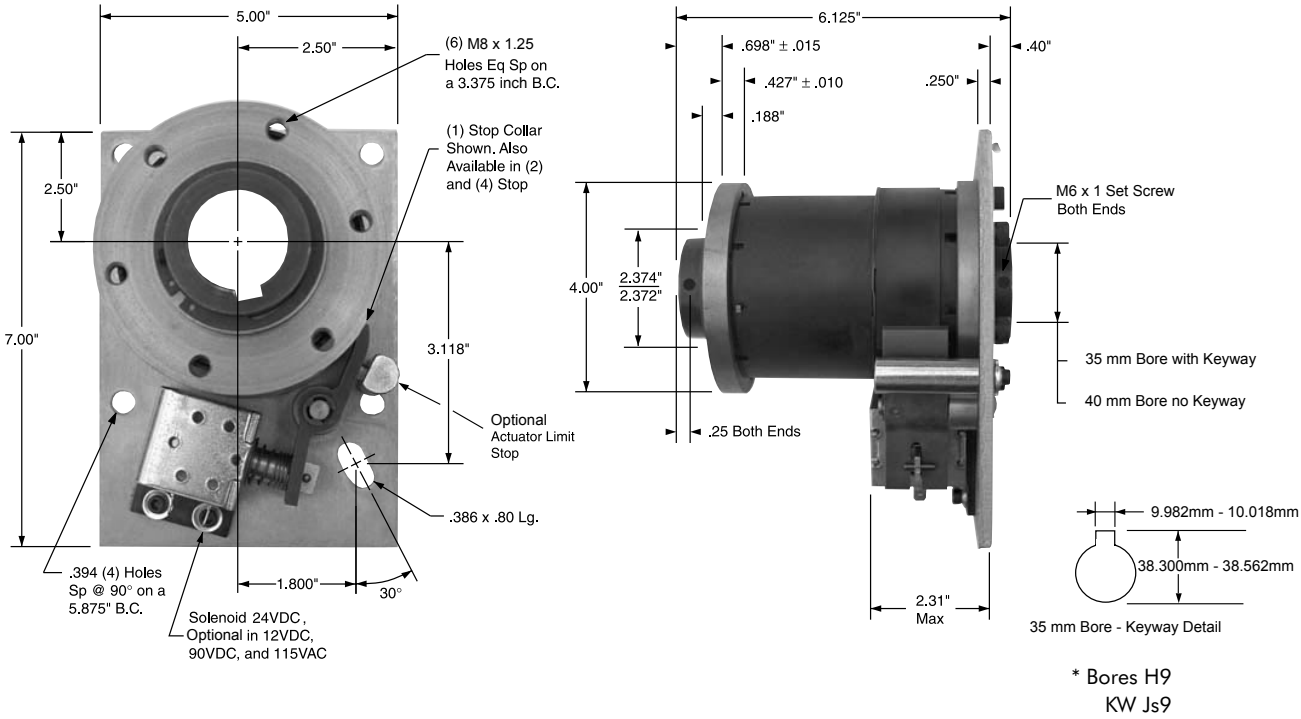

* Bores H9
KW Js9

Unit Shown is CW Rotation, CCW is Available

DCB-8 Metric Part Numbers

Part Number		Description			
CW Rotation	CCW Rotation	Model	Bore	Voltage	Stops
D318-17-001	D318-27-001	DCB8	35mm	24VDC	1
D318-17-003	D318-27-003	DCB8	35mm	24VDC	2
D318-17-005	D318-27-005	DCB8	35mm	24VDC	4
D318-17-002	D318-27-002	DCB8	40mm	24VDC	1
D318-17-004	D318-27-004	DCB8	40mm	24VDC	2
D318-17-006	D318-27-006	DCB8	40mm	24VDC	4

DCB-8 SUPER Metric Part Numbers

Part Number		Description			
CW Rotation	CCW Rotation	Model	Bore	Voltage	Stops
D338-17-013	D338-27-013	DCB8 SUPER	35mm	24VDC	1
D338-17-014	D338-27-014	DCB8 SUPER	35mm	24VDC	2
D338-17-015	D338-27-015	DCB8 SUPER	35mm	24VDC	4
D338-17-016	D338-27-016	DCB8 SUPER	40mm	24VDC	1
D338-17-017	D338-27-017	DCB8 SUPER	40mm	24VDC	2
D338-17-018	D338-27-018	DCB8 SUPER	40mm	24VDC	4

DCB-8 & DCB-8 SUPER Metric Replacement Parts

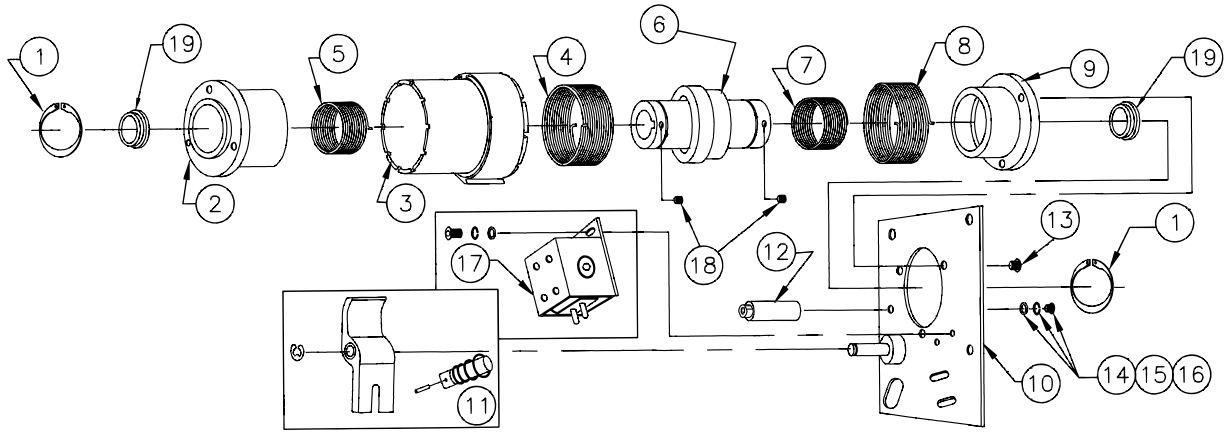

Item	Part No.	Rotation or Voltage	Description
1	D748-1-0039		Retaining Ring
2	D540-8-0041 D541-8-0012		Metric Input Hub Super - Metric Input Hub
3	D266-8-0001 D266-8-0002 D266-8-0004 D266-8-0153 D266-8-0154 D266-8-0156 D266-8-0031 D266-8-0032 D266-8-0034 D266-8-0157 D266-8-0158 D266-8-0160	CW CW CW CW CW CW CCW CCW CCW CCW CCW CCW	1 Stop Collar 2 Stop Collar 4 Stop Collar Super - 1 Stop Collar Super - 2 Stop Collar Super - 4 Stop Collar 1 Stop Collar 2 Stop Collar 4 Stop Collar Super - 1 Stop Collar Super - 2 Stop Collar Super - 4 Stop Collar
4	D808-8-0003 D808-8-0004	CW CCW	Clutch Spring Clutch Spring
5	D808-8-0025 D808-8-0026	CW CCW	Anti-Overrun Spring Anti-Overrun Spring
6	D824-8-0420 D824-8-0410 D824-8-0589 104745	35mm 40mm 35mm 40mm	Output Shaft Output Shaft Super - Output Shaft Super - Output Shaft
7	D808-8-0025 D808-8-0026	CW CCW	Anti-Back Spring Anti-Back Spring
8	D808-8-0003 D808-8-0004	CW CCW	Brake Spring Brake Spring
9	D540-8-0016 D541-8-0010		Brake Hub Super - Brake Hub
10	D686-8-0051 D686-8-0052	CW CCW	Plate Assembly Plate Assembly
11	D102-1-0004 D102-1-0021		Actuator Assembly D6 Coil Actuator Assembly D7 Coil
12	D816-1-0005		* Actuator Limit Stop
13	DY-10714		Socket Head Screw
14	D950-1-0052		* Flat Washer
15	D950-1-0019		* Lock Washer
16	D797-1-0035		* Socket Head Screw
17	D101-1-0028 D101-1-0053	24VDC 24VDC	Coil Assembly D6 Super - Coil Assembly D7
18	D797-1-0174		M-6 Set Screw
19	D950-8-0001		Super - Thrust Washer

* Optional Actuator Limit Stop Feature