Wrap Spring Clutches

DCB-2 Dimensions

Product Function: Start-Stop

Specifications

Maximum Speed:	1800 RPM
Static Torque:	25 in.-lb
Max. Anti-overrun Torque:	10 in.-lb.
Max Anti-back Torque:	10 in.-lb.
Positioning Accuracy:	±1/2°
Weight:	1.25 lbs.

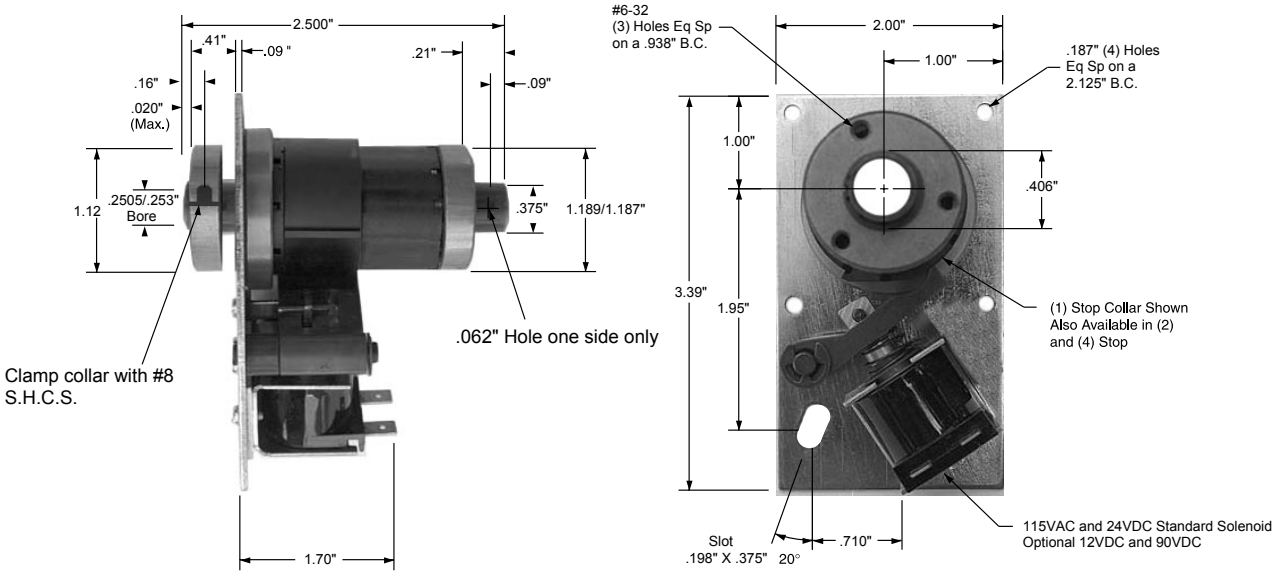

Unit Shown is CW Rotation, CCW is Available

DCB-2 Part Numbers

Part Number		Description			
CW Rotation	CCW Rotation	Model	Bore	Voltage	Stops
D302-17-001	D302-27-001	DCB2	1/4″	24VDC	1
D302-17-002	D302-27-011	DCB2	1/4″	24VDC	2
D302-17-003	D302-27-003	DCB2	1/4″	24VDC	4
D302-17-007	D302-27-007	DCB2	1/4″	115VAC	1
D302-17-008	D302-27-008	DCB2	1/4″	115VAC	2
D302-17-009	D302-27-029	DCB2	1/4″	115VAC	4

DCB-2 Replacement Parts

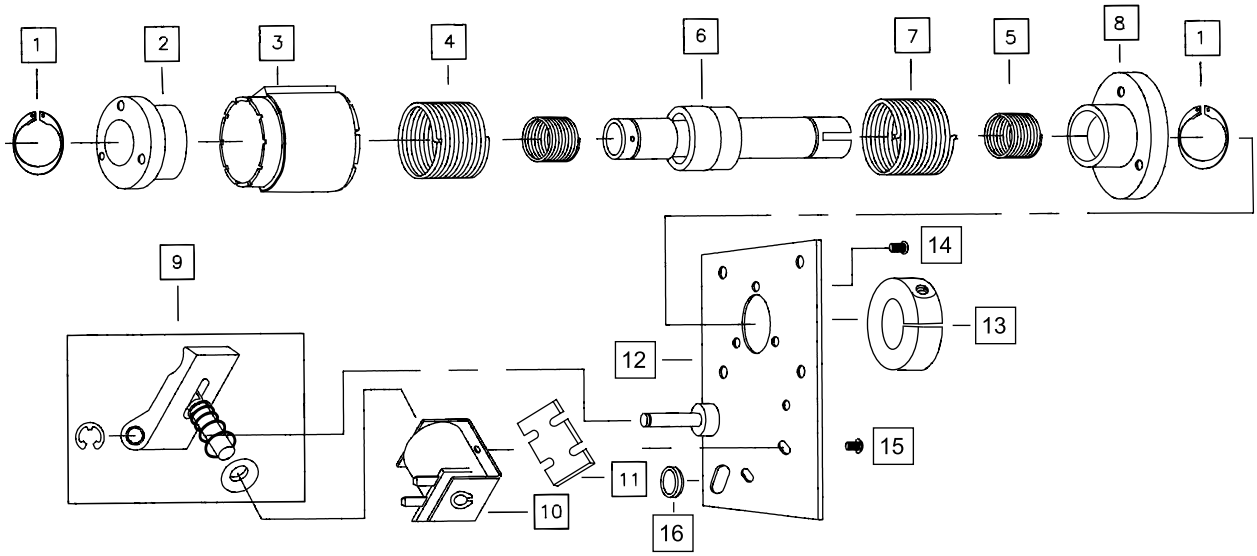

Item	Part No.	Rotation or Voltage	Description
1	040-0371		(2) Retaining Ring
2	002-4220		Input Hub
3	002-4312 002-4313 002-4315 002-4301 002-4302 002-4304	CW CW CW CCW CCW CCW	1 Stop Collar 2 Stop Collar 4 Stop Collar 1 Stop Collar 2 Stop Collar 4 Stop Collar
4	002-2032 002-2033	CW CCW	Drive Spring
5	002-2034 002-2035	CW CCW	(2) Anti-Overrun or Anti-Back Spring
6	002-5401		Output Assembly 1/4 Bore
7	002-2030 002-2031	CW CCW	Brake Spring
8	002-4202		Brake Hub
9	002-2014-1 002-2015-1	CW CCW	Actuator Assembly
10	002-1201 002-1204 002-1202 002-1203	24 VDC 115 VAC 12 VDC 90 VDC	Coil Assembly
11	002-7012		Solenoid Spacer
12	002-7006 002-7007	CW CCW	Plate Assembly
13	002-4327		Clamp Collar
14	040-04271		(3) 6-32 Flat Hd Socket Cap Screw
15	040-04318		(2) 6-32 Sems Machine Screw
16	002-2036		Grommet