DCB-10 & DCB-10 SUPER Metric Dimensions

Product Function: Start-Stop

Specifications

Maximum Speed:	200 RPM	Max. Anti-overrun Torque:	1200 in.-lb.	Positioning Accuracy:	±1/2°
Static Torque:	5000 in.-lb	Max. Anti-back Torque:	1200 in.-lb.	Weight:	28 lbs.

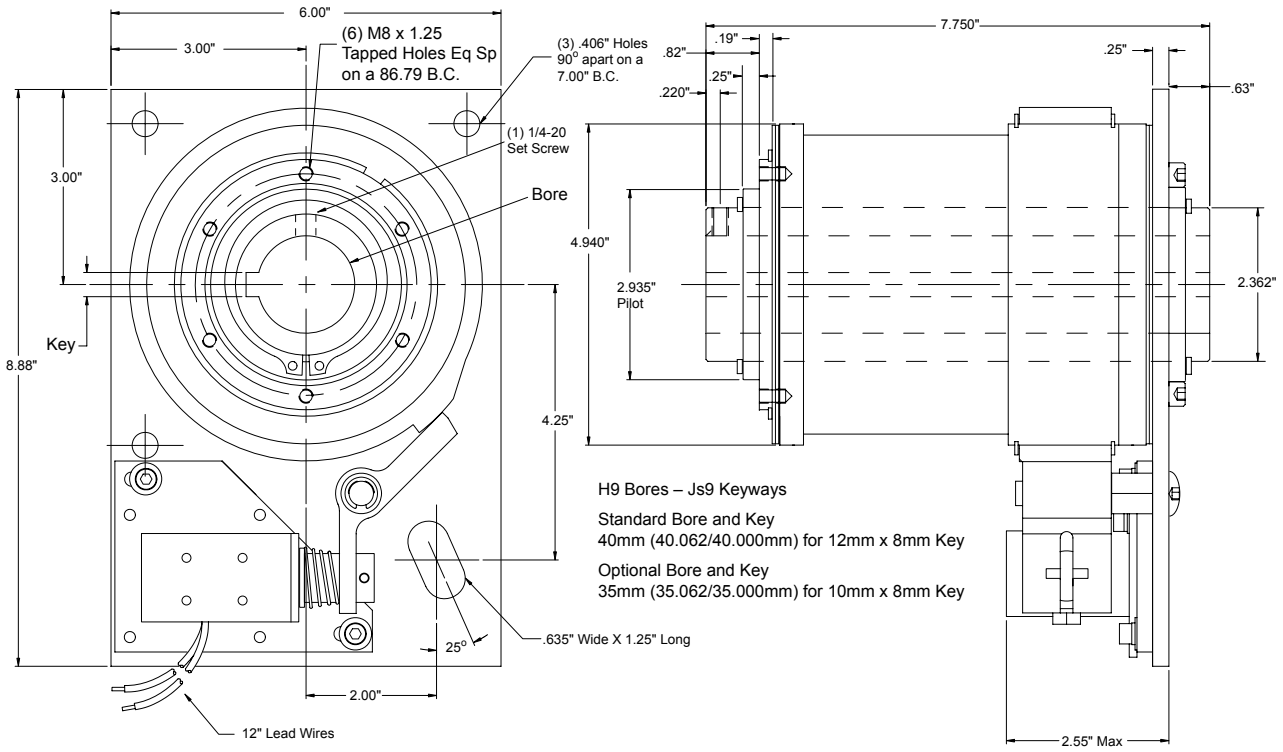

CLOCKWISE ROTATION SHOWN WITH DC SOLENOID
Other voltages available: 12VDC, 90VDC and 115VAC

DCB-10 Metric Part Numbers

Part Number		Description			
CW Rotation	CCW Rotation	Model	Bore	Voltage	Stops
D310-17-001	D310-27-001	DCB10	40mm	24VDC	1
D310-17-002	D310-27-002	DCB10	40mm	24VDC	2
D310-17-003	D310-27-003	DCB10	40mm	24VDC	4

DCB-10 SUPER Metric Part Numbers

Part Number		Description			
CW Rotation	CCW Rotation	Model	Bore	Voltage	Stops
D330-17-001	D330-27-001	DCB10 SUPER	40mm	24VDC	1
D330-17-003	D330-27-003	DCB10 SUPER	40mm	24VDC	2
D330-17-005	D330-27-005	DCB10 SUPER	40mm	24VDC	4

Wrap Spring Clutch-Brakes – Replacement Parts

DCB-10 & DCB-10 SUPER Metric Replacement Parts

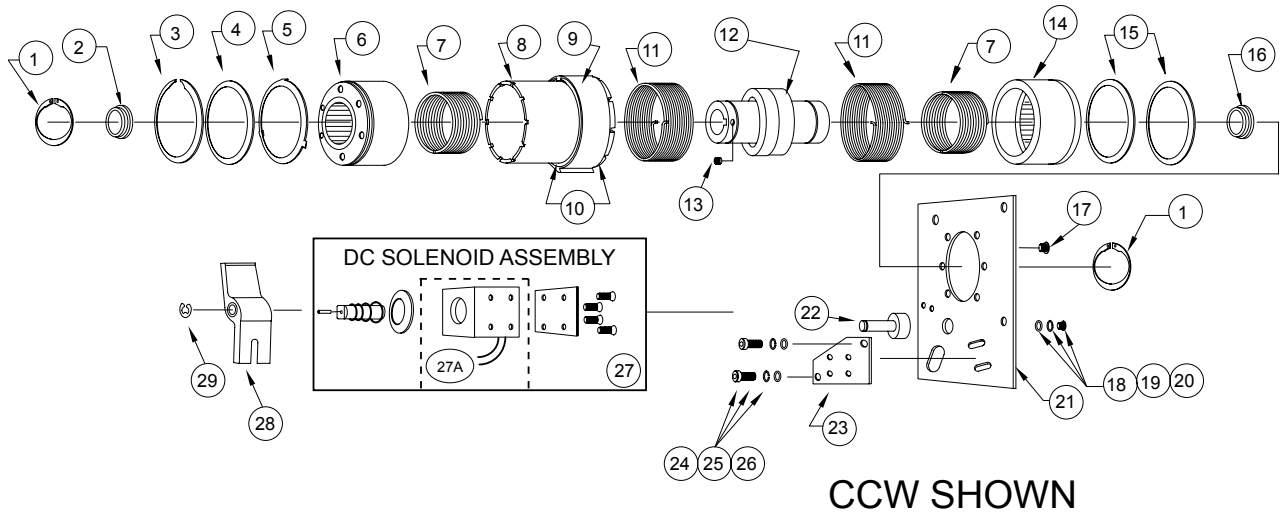

Item	Part No.	Rotation - Bore or Voltage	Description
1	040-03123		(2) Retaining Ring (5100-237)
2	D950-10-0002		Input Thrust Washer
3	040-03126		Retaining Ring (US-381)
4	D807-10-0001		Collar Spacer
5	D807-10-0002		Tabbed Input Collar Spacer
6	D541-10-0004		Metric Input Hub
	D541-10-0002		Super - Metric Input Hub with Wear Ring
7	D808-0-0001 D808-0-0002	CW CCW	(2) Anti-Overrun / Anti-Back Spring
8	D803-10-0001	CW or CCW	Collar Sleeve
9	D245-0-0101 D245-0-0102 D245-0-0104	CW or CCW CW or CCW CW or CCW	1 Stop Cam 2 Stop Cam 4 Stop Cam
10	040-03121		(2) Retaining Ring (US-500)
11	D808-0-0009 D808-0-0010	CW CCW	(2) Clutch / Brake Spring
12	D824-10-0012 D824-10-0013	35mm 40mm	Metric Output Shaft
	D824-10-0005 D824-10-0006	35mm 40mm	Super - Metric Output Shaft with Wear Rings
13	040-04451		Set Screw Cup Point (M6 x 1.0 x 10mm Long)
14	D541-10-0006		Brake Hub
	D541-10-0005		Super - Brake Hub with Wear Ring
15	D807-10-0003		(A/R) Brake Collar Spacer
16	D950-10-0001		Brake Thrust Washer
17	040-04227		(6) Cap Screws (1/4-20 x 5/8 Long)
18	040-06118		Flat Washer (3/8)
19	040-0694		Lock Washer (3/8)
20	040-04493		Button Head Cap Screw (3/8-24 x 3/4 Long)
21	D686-10-0001		Plate
22	D679-10-0001		Actuator Post
23	D686-10-0002		Solenoid Plate
24	040-04487		(2) Cap Screws (10-32 x 5/8 Long)
25	040-0688		(2) Lock Washer (#10)
26	040-06159		(2) Flat Washer (#10)
27	D101-10-0005	CW or CCW - 24VDC	DC Coil Assembly - Incl. Coil & Hardware
27A	D275-1-0073	24VDC	DC Coil Only
28	D102-10-0001		Actuator
29	040-03125		Retaining Ring (5133-37)