Dynatec® Controls

Dynatec® 2750 Control

Accel/Decel Dual Channel Clutch/Brake Control

Description

The Dynatec® 2750 (D2750) is a solid-state, digitally designed accel/decel clutch/brake controller, engineered to precisely operate 90 VDC clutch/brake (C/B) coils with current loads of up to 1.0 amp and din rail mounting for ease of installation.

This controller operates one or two coils, incorporating an anti-overlap circuit.

The D2750 controller employs technology to ensure long life and reliable service: The D2750 incorporates voltage protection on the AC input. When transient voltage spikes or notching is present on AC lines, an isolation transformer is required to filter the incoming power to the D2750.

Specifications

Power Input	
Voltage	115 VAC
Current	1.5 amp
Frequency	50/60 HZ
Fusing	Customer-supplied 2 amp
Power Output	
Voltage	0-90 VDC
Current	1.0 amp Max.
D2750 with Subpanel Dimensions	
Weight	18 oz.
Overall	2.76" H. x 3.94" H. x 5.28" D.
Temperature	
Operating:	0° to 65°C (32° to 149°F)

Features

- Meets UL Certification
- Soft-Start and Soft-Stop
  (Ramps output from 0-2 seconds)
- Anti-Overlap Circuit
- 115 VAC Input
- Selective Input Switching Logic
  Contact or Opto-Isolated 3-30 VDC or 115 VAC
- Status/Diagnostic lights:
  Clutch On
  Brake On

Input Logic	Part No.
115 VAC, 50/60 Hz	**214257-040-2230**
3-30 VDC	**214257-040-2231**
Contact Closure	**214257-040-2232**

ISO-9001 certified

D2750 Anti-Overlap

When using conventional controls where the output voltage is switched by a relay contact, overlap occurs when you see the arching across the contacts. This indicates that just for an instant the brake and clutch are both engaged. This graph represents overlap. The effect of this is excessive wear and heat to the clutch/brake system.

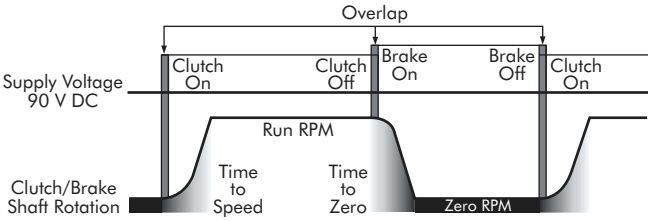

Clutch/Brake Shaft RPM Curve using Conventional Control

The Dynatec® 2750 incorporates MOV's and time delay logic that will prevent the effects of overlap. This graph illustrates the effects of anti-overlap. Notice the difference between the RPM curves. You have a shorter time to speed and time to zero, and the switching is more precise, creating less heat. These controls can actually operate the clutch/brake system at higher cycle rates, with better repeatability and less heat than conventional controls.

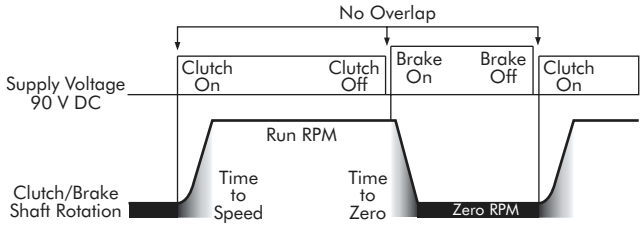

Clutch/Brake Shaft RPM Curve using Dynacorp® Control with Anti-Overlap

D2750 Soft-Start/Soft-Stop

This feature is used to cushion the engagement of the clutch and brake by ramping the voltage. This graph displays the RPM curve of a clutch brake package with No Soft-Start/Soft-Stop.

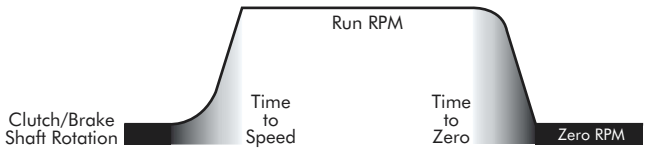

Clutch/Brake Shaft RPM Curve using Conventional Control

The Dynatec® 2750 incorporates a Soft-Start/Soft-Stop feature. This illustration displays the voltage ramping up and ramping down. The ramp time is adjustable by turning the Soft-Start potentiometer for clutch and Soft-Stop for brake and can be adjusted from 0 to 2 seconds, which is the elapsed time from 0 to 90 VDC. There are several factors that are taken into consideration when using this feature: Inertia, Cycle Rate, RPM and Load Torque.

Adjust the clutch or brake potentiometer to the desired ramp time.

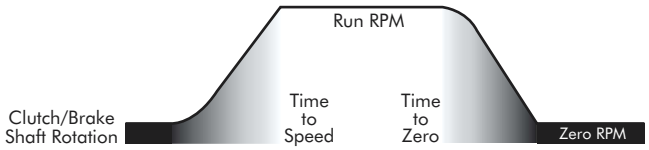

Clutch/Brake Shaft RPM Curve using a Dynacorp® Control with Soft-Start and Soft-Stop

D2750 Wiring Information

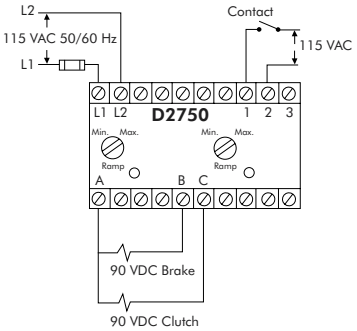

Wiring example for logic input 115 VAC

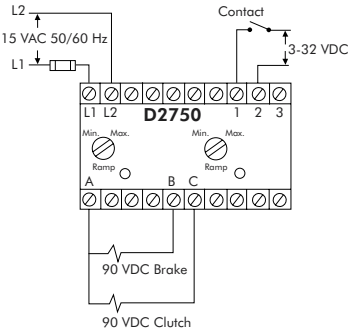

Wiring example for logic input 3-32 VDC

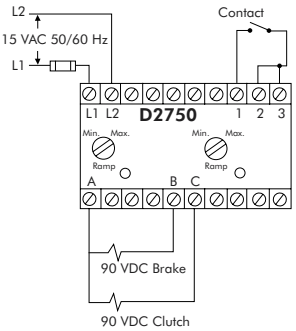

Wiring example for contact closure

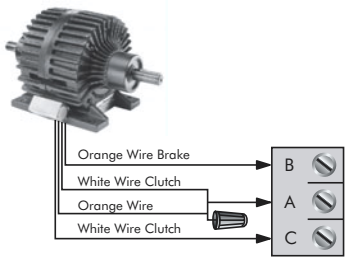

Dynacorp® Clutch/Brake Package Wiring

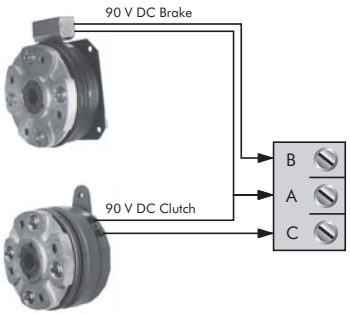

Single Clutch and Brake Wiring